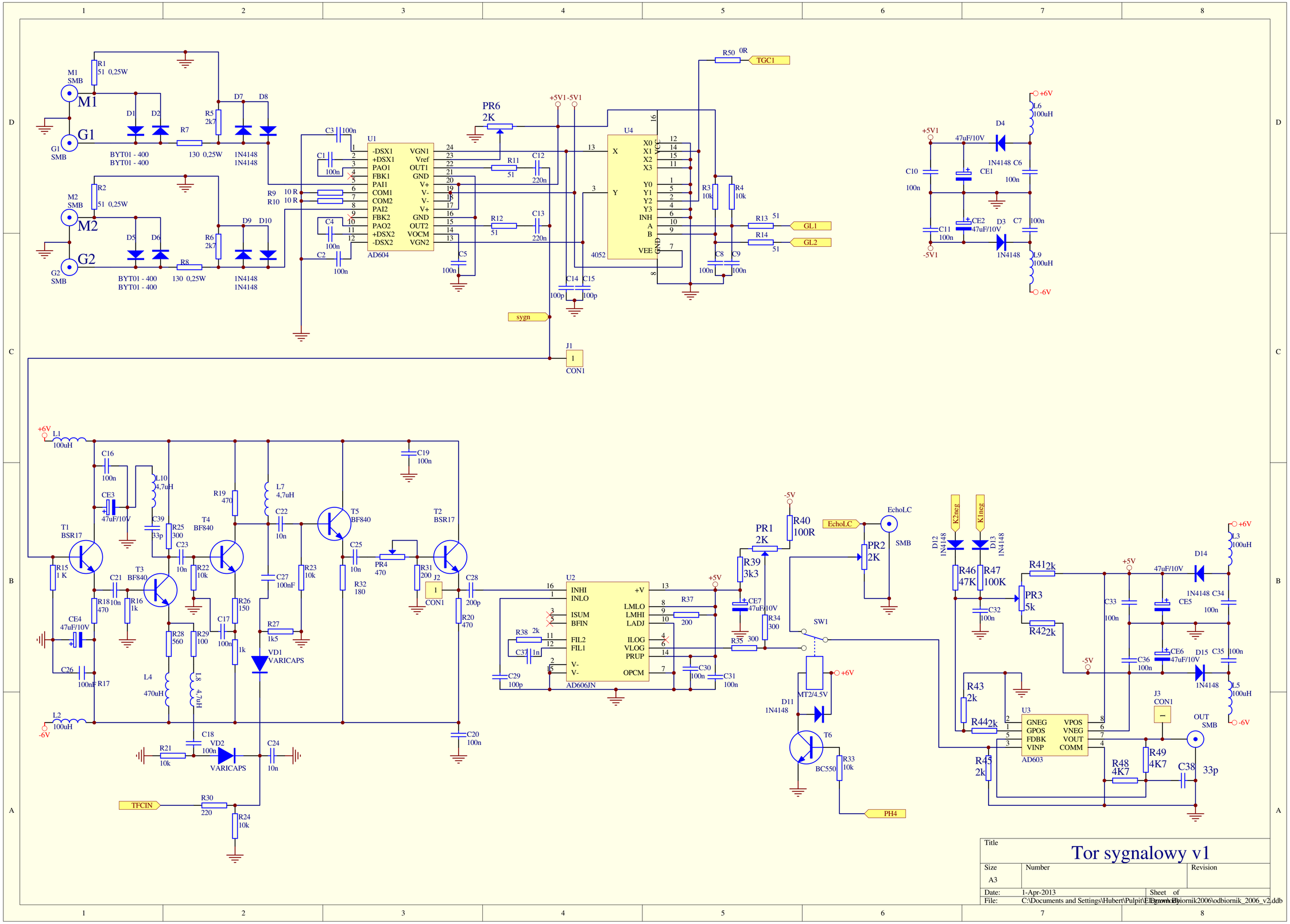

Title: Tor sygnalowy v1

Size	Number	Revision
A3		

Date: 1-Apr-2013 Sheet of

File: C:\Documents and Settings\Hubert\Pulpit\Elektronik\odbiornik2006\odbiornik_2006_v2.ddb Drawn By: